ALPHA SUITE, INC.
Arlington Heights, IL • Tel: 847-788-9489 • Email: Service@alphasuite.com

ASI IN-SITU DILUTING PROBE HEATER MODEL DP-060 SERIES

The ASI Model DP-060 Series Probe Heater is specially developed for use with new ASI or existing EPM In-situ Diluting Samplers (Probes). Another simple and low cost way to keep your CEMS sampling equipment downtime to a minimum.

Lighter:
Assembly with extension pipe will be much lighter as it will use 3" nominal pipe (**3-1/2" OD**) instead of 3-1/2" nominal pipe (**4" OD**) as with the EPM model 797.561L.

Compact:
Can fit into smaller ID stack/duct ports, as the extension ring does not exceed the extension pipe OD of **3-1/2"**. The EPM model has and extension ring with a **5" OD**.

Compatible:
Can be used with existing in-situ dilution probes regardless of probe-flange type, as long as the probe has newer style filter cap assembly (with groove for the Kalrez o-ring at probe-tip).

Adaptable:
Custom adaptors can be produced to attach heated probe assembly to many existing extension pipe configurations. Also, has three tapped holes on tip face of outer heater mantle, that can be used to attach particulate deflector if desired (custom made by end user, or designed by ASI upon request).

Interchangeable:
The heater coils are interchangeable between this heater assembly and the EPM 797.560 series heaters.

Economical:
Whether you are looking for a basic coil replacement, or a complete heater assembly, our pricing is significantly lower than that of the formerly available EPM models. ASI also offers **volume incentives**. Please contact us for current pricing.

The unit comes complete with standard extension ring (for customer to weld to pipe) and mounting bolts, Kalrez o-ring, anti-seize compound, extra gaskets and necessary tools.

GENERAL SPECIFICATIONS

Wetted Parts:	Stainless 316/316L
Voltage:	115VAC (230VAC Optional)
Wattage:	400W (Higher Wattage Optional)
Thermocouple Type:	K-Type
Temperature Regulating:	Via Temperature Controller (by customer)
Max Op. Temp:	572°F (300°C) [Non-Coated Versions Only]
Shipping Weight:	12 lbs.

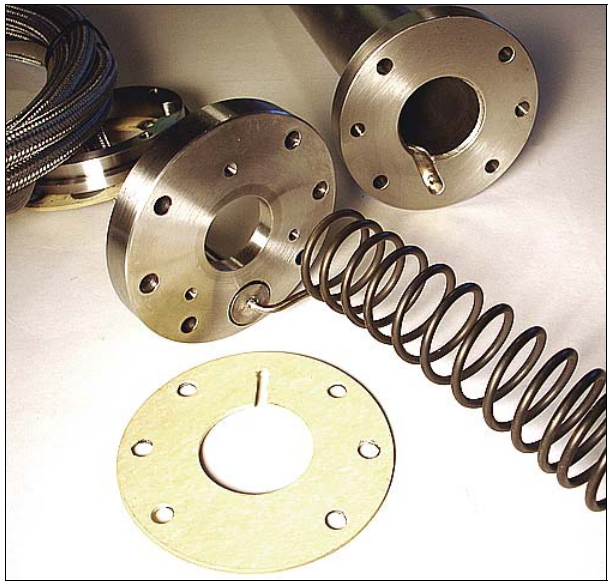

1. coil assembly with inner flange removed from mantle.

2. coil assembly with inner flange installed into mantle.

3. in-situ diluting probe tip (filter cap assembly)
*special grooved cap for Kalrez o-ring required.

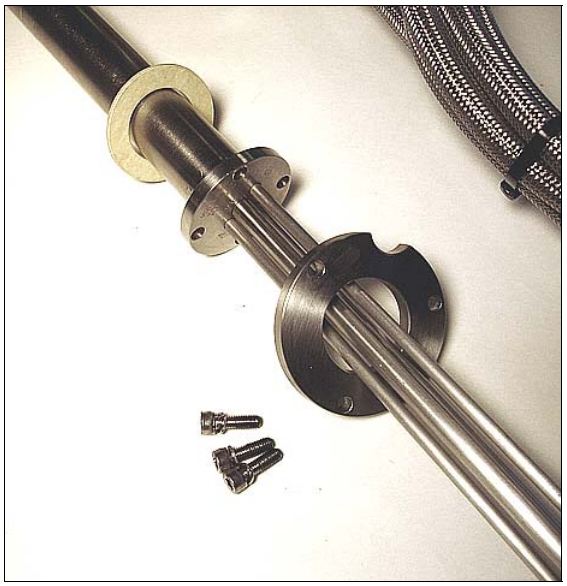

4. in-situ diluting probe with gasket & retaining ring removed.

5. in-situ diluting probe installed into heater assembly.

ASI Model DP-060-A Series In-situ Diluting Probe Heater

FIXED INSTALLATION VERSION

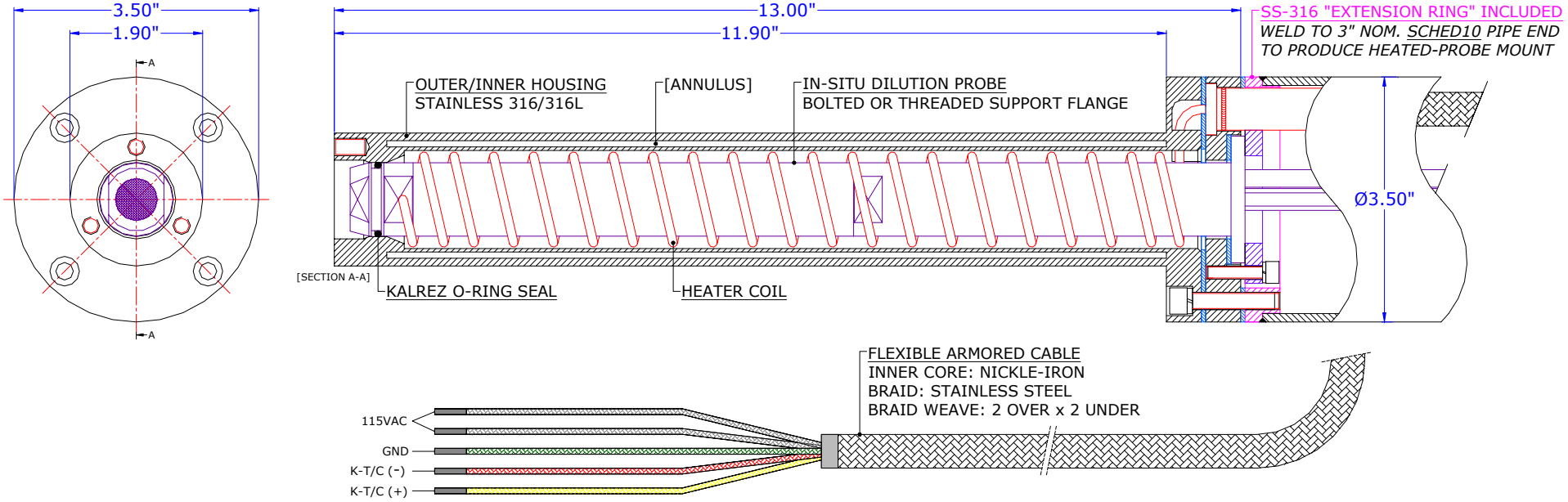

GENERAL SPECIFICATIONS:

Wetted Parts:	Stainless Steel 316/316L
Voltage:	115VAC (230VAC Optional)
Wattage:	400W (Higher Wattage Optional)
Thermocouple Type:	K-Type
Cable Length:	4 Meter (8 Meter Optional)
Outer Cable Covering:	Flexible Armored Conduit
Temperature Regulating:	Via Temperature Controller (by customer)
Max Operating Temp:	572°F (300°C) Max. Process or Set-Point Temperature
Shipping Weight:	12 lbs.

- For Illustration Purposes Only -

Specifications subject to change without notice
Contact Alpha Suite Inc. for current information
©Alpha Suite Inc.

Alpha Suite, Inc.
www.alphasuite.com

BASIC DIMENSIONS

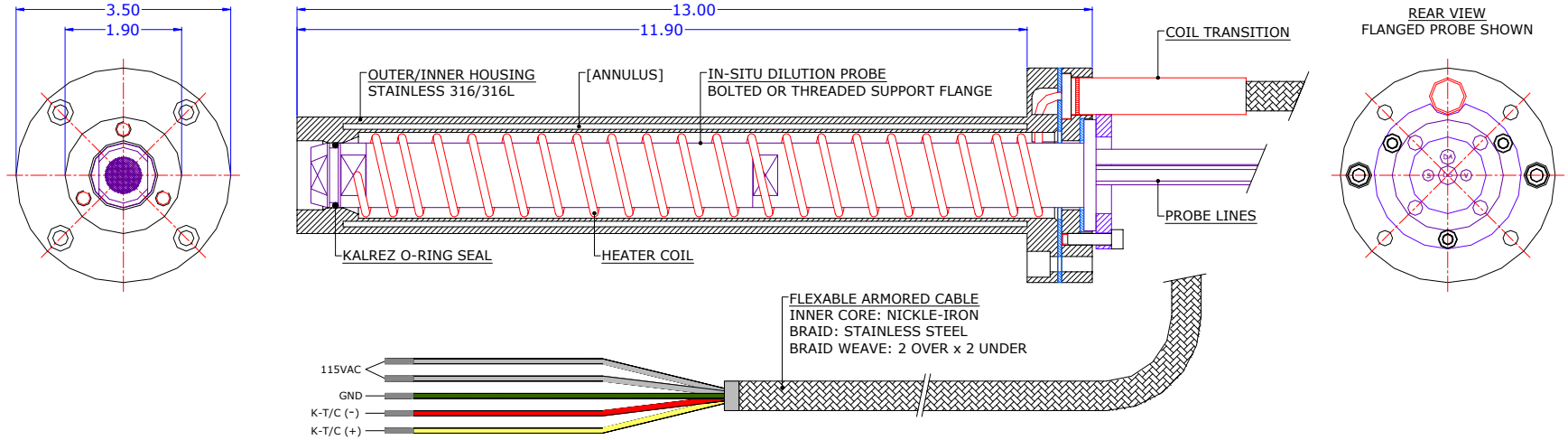

STANDARD MOUNTING

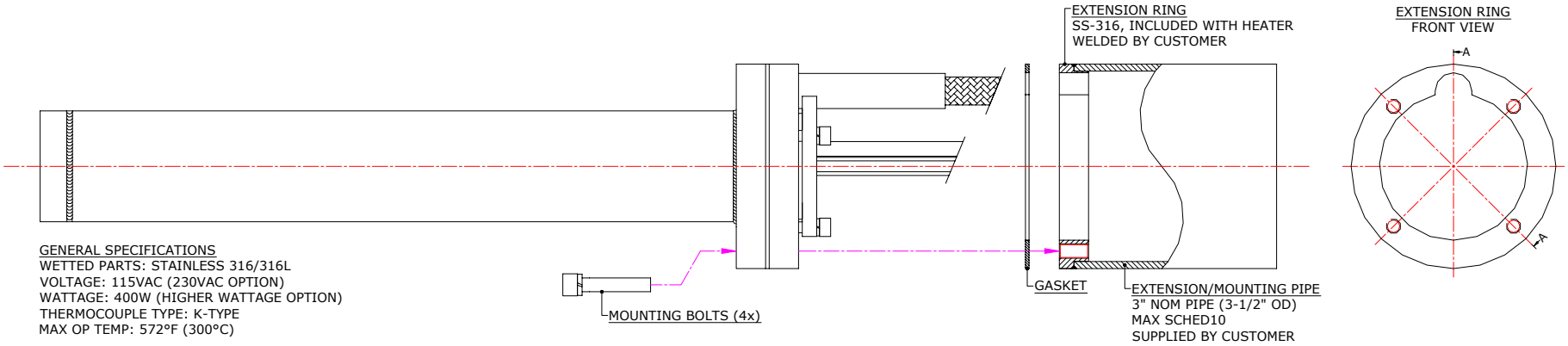

GENERAL SPECIFICATIONS
WETTED PARTS: STAINLESS 316/316L
VOLTAGE: 115VAC (230VAC OPTION)
WATTAGE: 400W (HIGHER WATTAGE OPTION)
THERMOCOUPLE TYPE: K-TYPE
MAX OP TEMP: 572°F (300°C)

MOUNTING REQUIREMENTS
EXTENSION RING (INCLUDED) TO BE
WELDED TO 3" NOM. PIPE (3-1/2" OD)
MAX. SCHED10

*CUSTOM ADAPTORS CAN BE PRODUCED
TO ATTACH HEATER TO MANY EXISTING
EXTENSION PIPE CONFIGURATIONS.

Alpha Suite, Inc.
www.alphasuite.com

TITLE: MODEL DP-060-A HEATER ASSEMBLY	DWG#: DP-060-A-SPECV01 ASSEMBLY#: DP-060-A

STANDARD MOUNTING

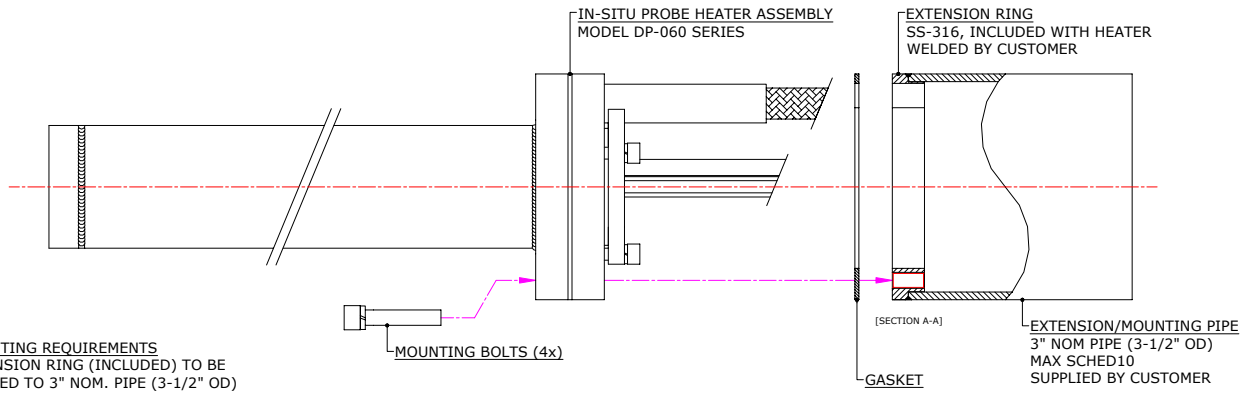

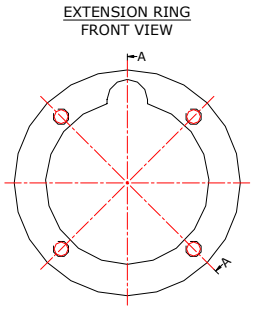

MOUNTING REQUIREMENTS
EXTENSION RING (INCLUDED) TO BE WELDED TO 3" NOM. PIPE (3-1/2" OD) MAX. SCHED10

*CUSTOM ADAPTORS CAN BE PRODUCED TO ATTACH HEATER TO MANY EXISTING EXTENSION PIPE CONFIGURATIONS.

COMPLETED MOUNTING

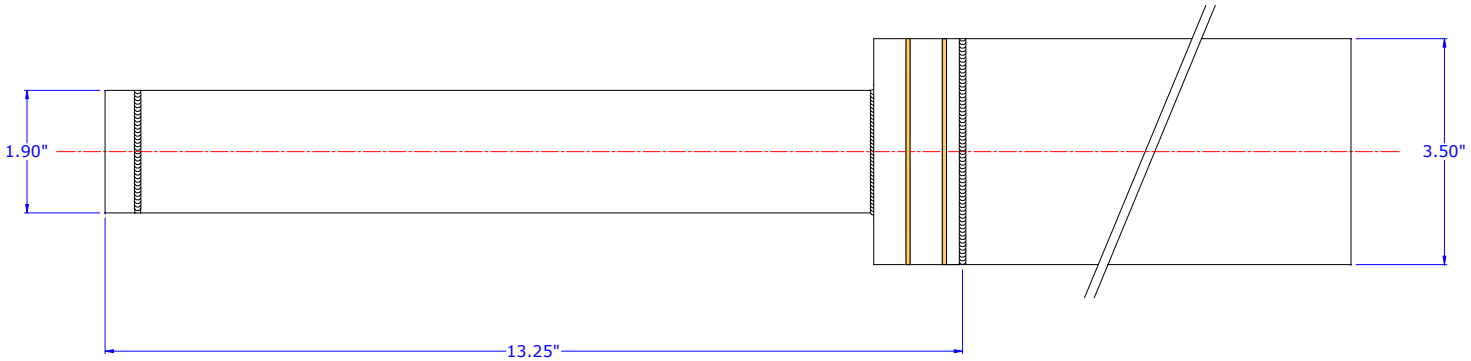

Alpha Suite, Inc.
www.alphasuite.com

TITLE: MODEL DP-060-A HEATER, STANDARD MOUNTING	DWG#: DP-060-A-SPECV02 ASSEMBLY#: DP-060-A

Model DP-060-A2 Series

In-situ Diluting Probe Heater

STACK TESTER VERSION I.

ASI Model DP-060 Series In-situ Diluting Probe Heater

STACK TESTER VERSION

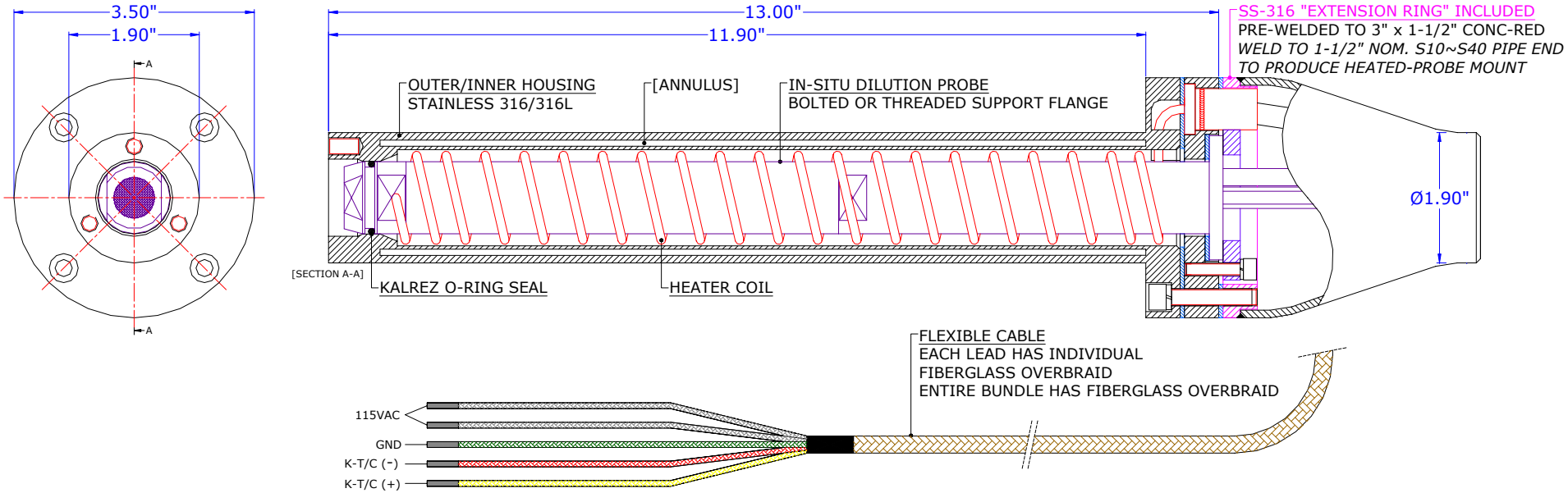

GENERAL SPECIFICATIONS:

Wetted Parts:	Stainless Steel 316/316L
Voltage:	115VAC (230VAC Optional)
Wattage:	400W (Higher Wattage Optional)
Thermocouple Type:	K-Type
Cable Length:	4 Meter (8 Meter Optional)
Outer Cable Covering:	Fiberglass Overbraid
Temperature Regulating:	Via Temperature Controller (by customer)
Max Operating Temp:	572°F (300°C) Max. Process or Set-Point Temperature
Shipping Weight:	12 lbs.

- For Illustration Purposes Only -
Specifications subject to change without notice
Contact Alpha Suite Inc. for current information
©Alpha Suite Inc.

Alpha Suite, Inc.
www.alphasuite.com

BASIC DIMENSIONS

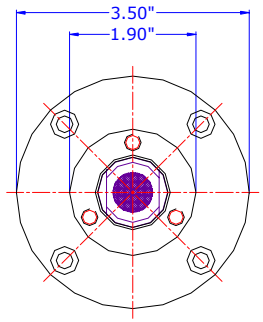

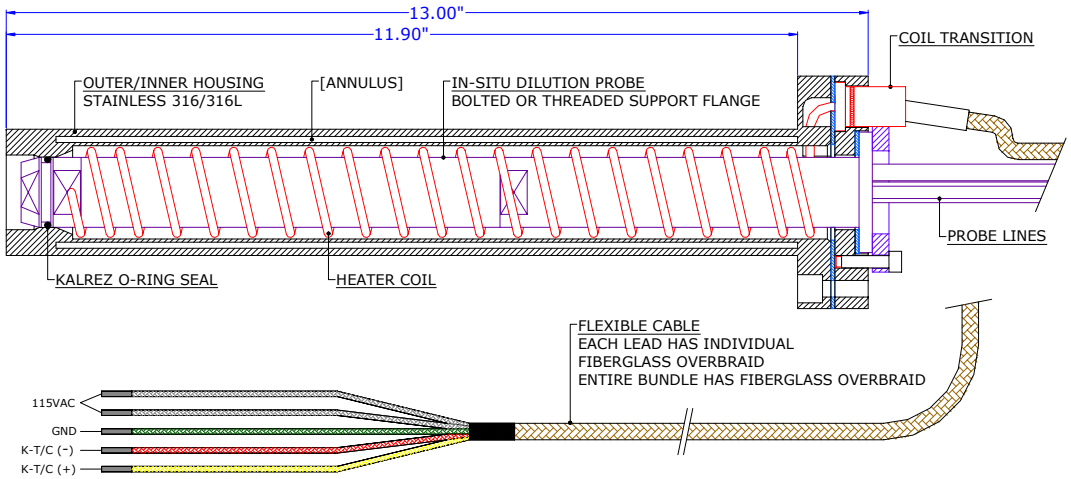

REAR VIEW
FLANGED PROBE SHOWN

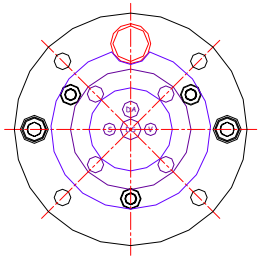

STANDARD MOUNTING

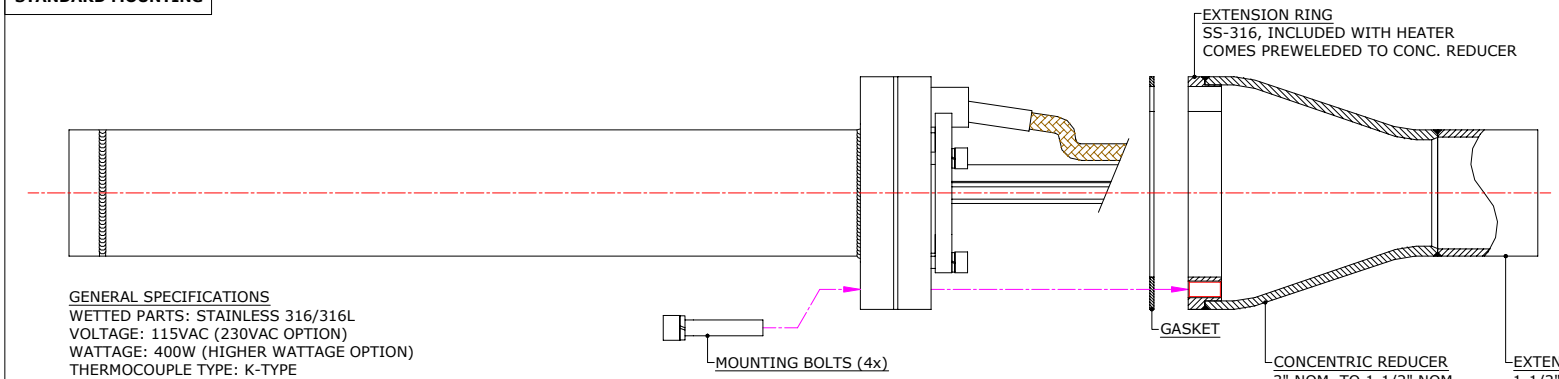

EXTENSION RING
FRONT VIEW

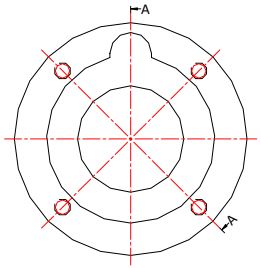

GENERAL SPECIFICATIONS
WETTED PARTS: STAINLESS 316/316L
VOLTAGE: 115VAC (230VAC OPTION)
WATTAGE: 400W (HIGHER WATTAGE OPTION)
THERMOCOUPLE TYPE: K-TYPE
MAX OP TEMP: 572°F (300°C)

MOUNTING REQUIREMENTS
EXTENSION RING (INCLUDED) IS PREWELDED TO A 3" NOM. x 1-1/2" NOM. SCHED10 CONCENTRIC REDUCER, SS316/316L. THIS ASSEMBLY IS WELDED, BY CUSTOMER, TO A 1-1/2" NOM (1.9" OD) SCHED10 EXTENSION PIPE.

CUSTOM ADAPTORS CAN BE PRODUCED TO ATTACH HEATER ASSEMBLY TO MANY DIFFERENT EXTENSION PIPE CONFIGURATIONS. PLEASE CONTACT US WITH YOUR REQUIREMENTS.

THIS CONFIGURATION USING THE CONCENTRIC REDUCER, AND SMALLER OD PIPE, WAS DEVELOPED TO FURTHER REDUCE THE OVERALL WEIGHT OF THE HEATED PROBE ASSEMBLY FOR USE BY STACK TESTERS.

USING THE CONCENTRIC REQUIRES OUR SPECIAL TRANSITION HEATER COIL WHICH DOES NOT USE THE ARMORED CABLE. ALTHOUGH THIS WILL ALSO REDUCE THE OVERALL WEIGHT OF THE ASSEMBLY, IT IS CONSEQUENTLY NOT RECOMMENDED FOR FIXED/PERMANENT SAMPLING INSTALLATIONS. PLEASE CALL FOR FURTHER INFORMATION.

4PC EXTENSION TUBE SET (FOR THE PROBE LINES) IS BY CUSTOMER OR ORDERED SEPARATELY.

TITLE: MODEL DP-060-A2 HEATER ASSEMBLY "STACK TESTER VERSION 1"	DWG#: DP-060-A2-SPECV01 ASSEMBLY#: DP-060-A2

STANDARD MOUNTING

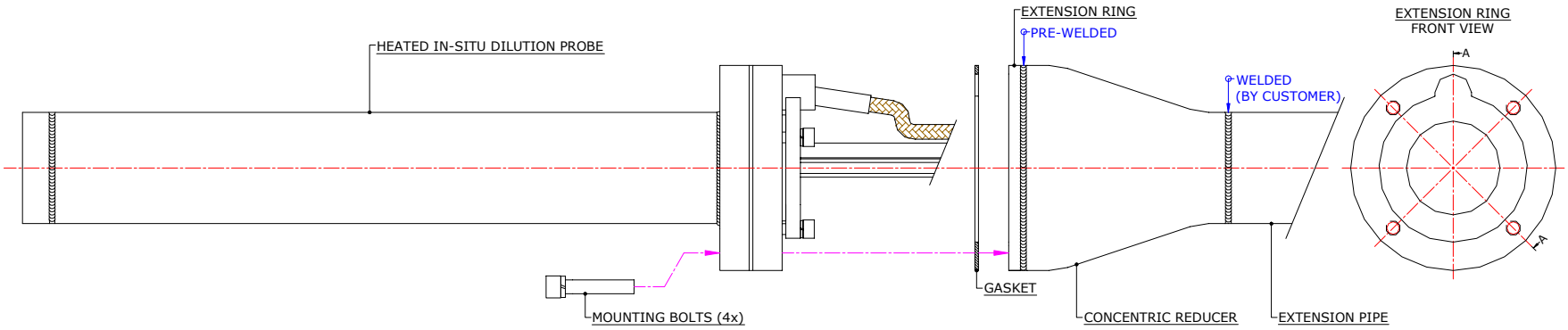

COMPLETED MOUNTING

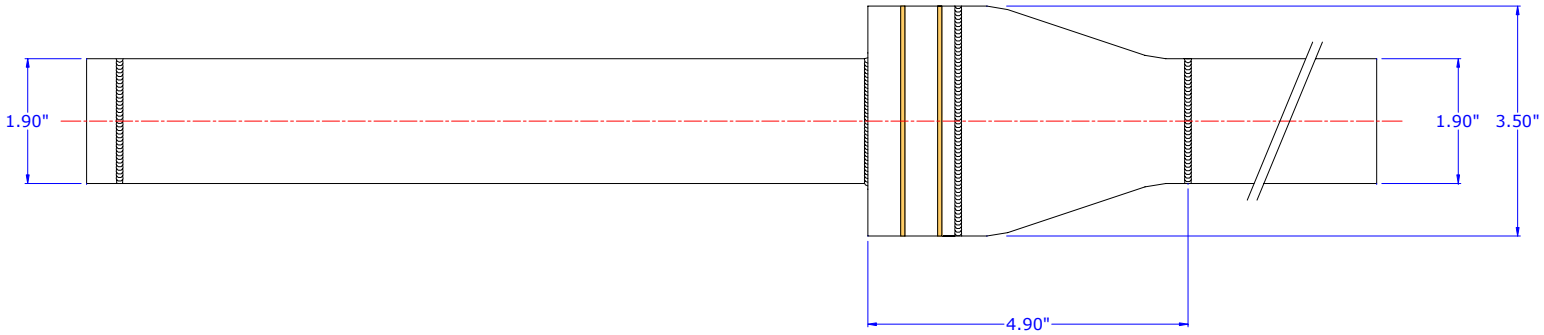

Alpha Suite, Inc.
www.alphasuite.com

TITLE: MODEL DP-060-A2 HEATER, STANDARD MOUNTING	DWG#: DP-060-A2-SPECV02 ASSEMBLY#: DP-060-A2

ASI Model DP-060-A Series In-situ Diluting Probe Heater

** * * NEW "CORROSION-GUARD" SERIES * * **

HALAR COATED VERSION

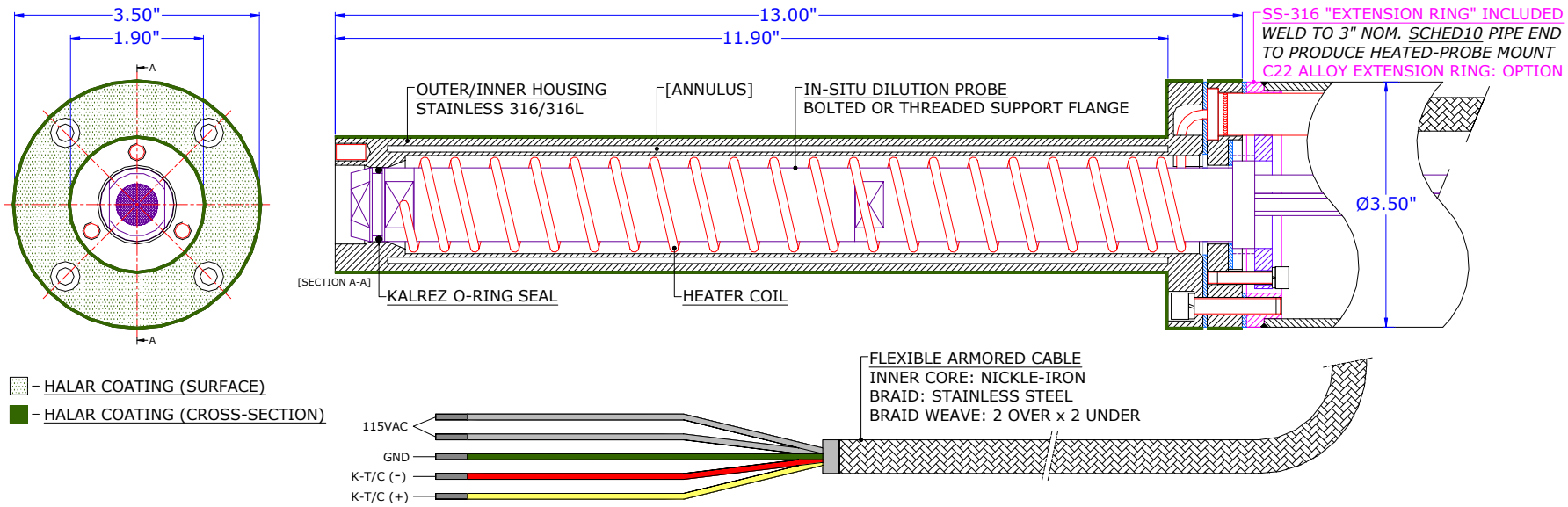

GENERAL SPECIFICATIONS:

Wetted Parts:	Halar Coated Stainless Steel 316/316L
Voltage:	115VAC (230VAC Optional)
Wattage:	400W (Higher Wattage Optional)
Thermocouple Type:	K-Type
Cable Length:	4 Meter (8 Meter Optional)
Outer Cable Covering:	Flexible Armored Conduit
Temperature Regulating:	Via Temperature Controller (by customer)
Max Operating Temp's:	Process: 300°F (150°C) with Short Durations 340°F (170°C) Coil Set-Point (via a temperature controller): 400°F (200°C)
Shipping Weight:	12 lbs.

- For Illustration Purposes Only -
Specifications subject to change without notice
Contact Alpha Suite Inc. for current information
©Alpha Suite Inc.

Alpha Suite, Inc.
www.alphasuite.com

ASI Model DP-060-A Series In-situ Diluting Probe Heater

** * * NEW "CORROSION-GUARD" SERIES * * **

C22 ALLOY VERSION

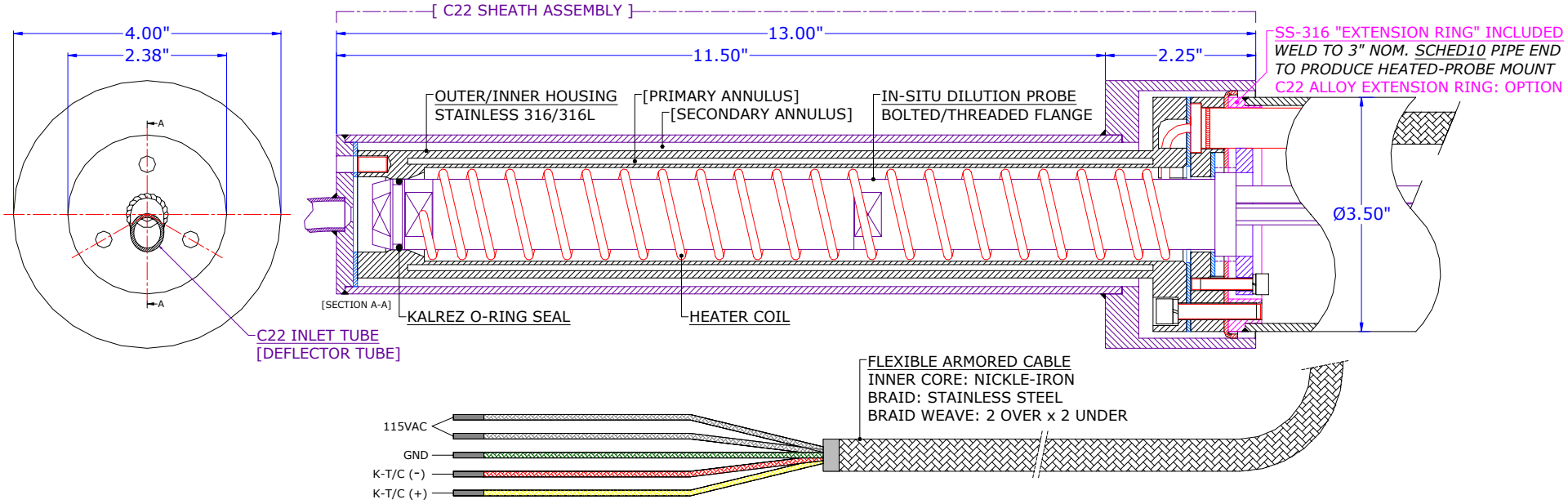

GENERAL SPECIFICATIONS:

Wetted Parts:	C22 Alloy
Voltage:	115VAC (230VAC Optional)
Wattage:	400W (Higher Wattage Optional)
Thermocouple Type:	K-Type
Cable Length:	4 Meter (8 Meter Optional)
Outer Cable Covering:	Flexible Armored Conduit
Temperature Regulating:	Via Temperature Controller (by customer)
Max Operating Temp:	572°F (300°C) Max. Process or Set-Point Temperature
Shipping Weight:	15 lbs.

- For Illustration Purposes Only -
Specifications subject to change without notice
Contact Alpha Suite Inc. for current information
©Alpha Suite Inc.

Alpha Suite, Inc.
www.alphasuite.com

ADAPTED MOUNTING

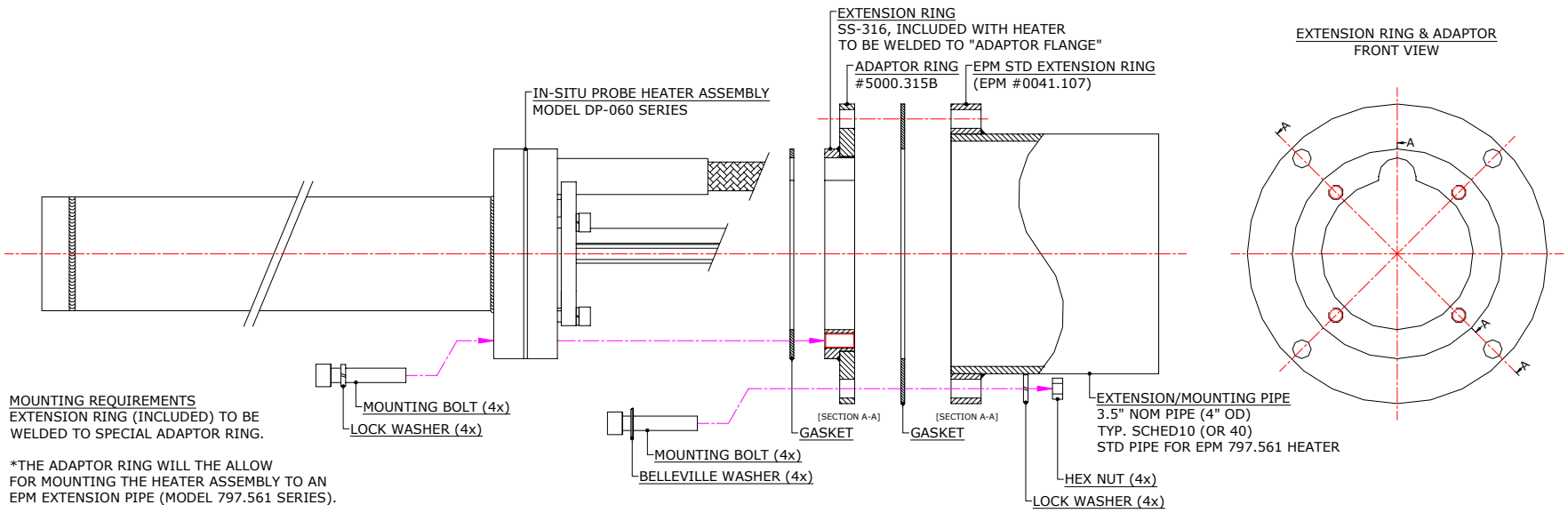

MOUNTING REQUIREMENTS
EXTENSION RING (INCLUDED) TO BE WELDED TO SPECIAL ADAPTOR RING.

*THE ADAPTOR RING WILL THE ALLOW FOR MOUNTING THE HEATER ASSEMBLY TO AN EPM EXTENSION PIPE (MODEL 797.561 SERIES).

COMPLETED MOUNTING

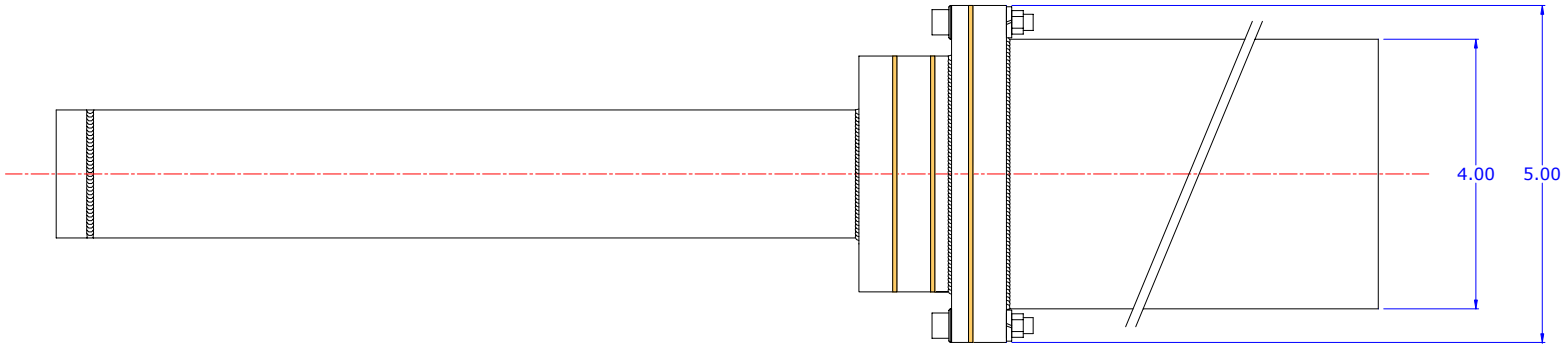

Alpha Suite, Inc.
www.alphasuite.com

TITLE:
MODEL DP-060-A HEATER, SPECIAL MOUNTING

DWG#: DP-060-A-SPECV03
ASSEMBLY#: DP-060-A